ZANEEN®

PROJECT	
TYPE	
SPECIFIER	
QUANTITY	
DATE	

IMAGINE ROUND TRIMLESS

A35389- _____ - _____ - _____ - _____ - _____

base number	Color Temperature	Finishes (Diamond)	Finishes (Triangle)	Finishes (Circle)	Reflector Options

1.To build a product code in our configurator select the specify button on the base model # product page
2. To build a manual product code on this datasheet choose from the options listed below in blue font and add the suffix to the base model #

GENERAL

Series: Imagine
Subseries: Imagine Round
Brand: Prolicht
Division: Architectural
Mounting Type: Trimless
Mounting Location: Ceiling
Subcategory: Spots

PHYSICAL

Shape: Round
Diameter (mm): 110
Diameter (in): 4 5/16
Length (mm): 220
Length (in): 8 11/16
Width (mm): 220
Width (in): 8 11/16
Depth (mm): 174
Depth (in): 6 7/8
Ceiling Thickness (mm): 10 / 12.5 / 15 / 25 / 30
Ceiling Thickness (in): 3/8 or 1/2 or 9/16 or 1 or 1 3/16
Min. Recessing Depth (mm): 145
Min. Recessing Depth (in): 5 11/16
Light Distribution: Adjustable / Direct
Weight (kg): 1.9
Weight (lbs): 4.18
Fixture Finish: SSR / BKV / CWI / CRY / HAB / LAG / UFT / ITA / RUA / RUR / MIC / FTG / MYG / TWT / LOD / PUS / FRO / FUP / KIA / POP / BLS / SPG / MEY / GOH / GUM / CHC / COM / ABZ / JAG / OBR / MOS / ROR
Fixture Material: Aluminum Die Cast
Cut-out Measurements: 225mm / 8 7/8" x 225mm / 8 7/8"
Upon Request: Unique Sizes

ELECTRICAL

Lamp Type: LED (Zhaga Standard)
Input Wattage (W): 20.9
Total Output Wattage (W): 18.7
Dimming: Tri-Mode (Non-Dimming and Phase Dimming (120Vac only) and 0-10V Dimming)
Driver Included: No
Driver Location: Recessed Housing
Driver Type: Constant Current - Universal
Driver Class: Class 2
Housing: See components
Input Voltage (V): 120 - 277
Constant Current (MA): 500

LED

Number of LEDs: 1
Color Temperature (°K): 2700 / 3000 / 3500 / 4000
Max. Delivered Lumen (lm): 1490 / 1530 / 1607 / 1640
CRI: >90 CRI
Lamp Life (hrs): 50000
Upon Request: Special Color Temperature

OPTICAL

Reflector°: 16 / 32
Adjustability: Rotational 355°; Tilt 45°
Upon Request: Special Beam Angles

RATINGS AND CERTIFICATIONS

Certified By: Certified for North American Standards
IP rating: IP20

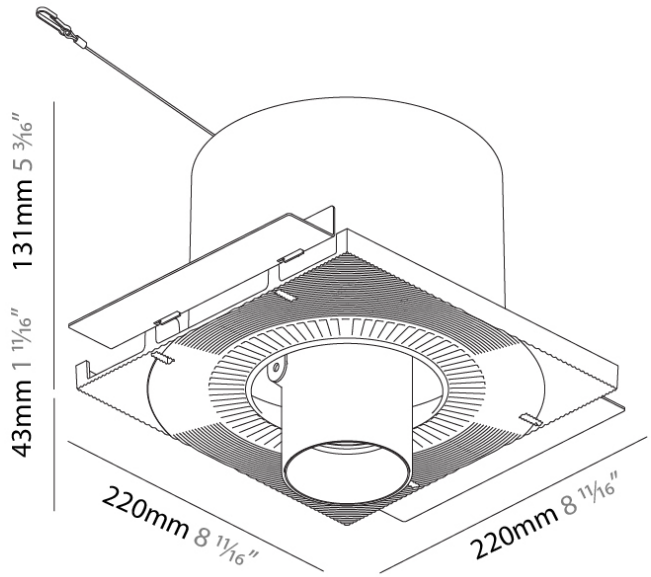

A

ZANEEN Inc. 1-800-387-8383, F 416-247-9319, www.zaneen.com
Available for International specifications by adding 'INT' at the end of the existing Model #. For assistance on 'custom' specifications, contact zteam@zaneen.com.
In a constant effort to supply the best product, we reserve the right to change specifications or materials without notice. The most recent specification sheets are found at zaneen.com

June 2, 2024, 12:54 am

ZANEEN®

IMAGINE ROUND TRIMLESS

A35389-

PROJECT	
TYPE	
SPECIFIER	
QUANTITY	
DATE	

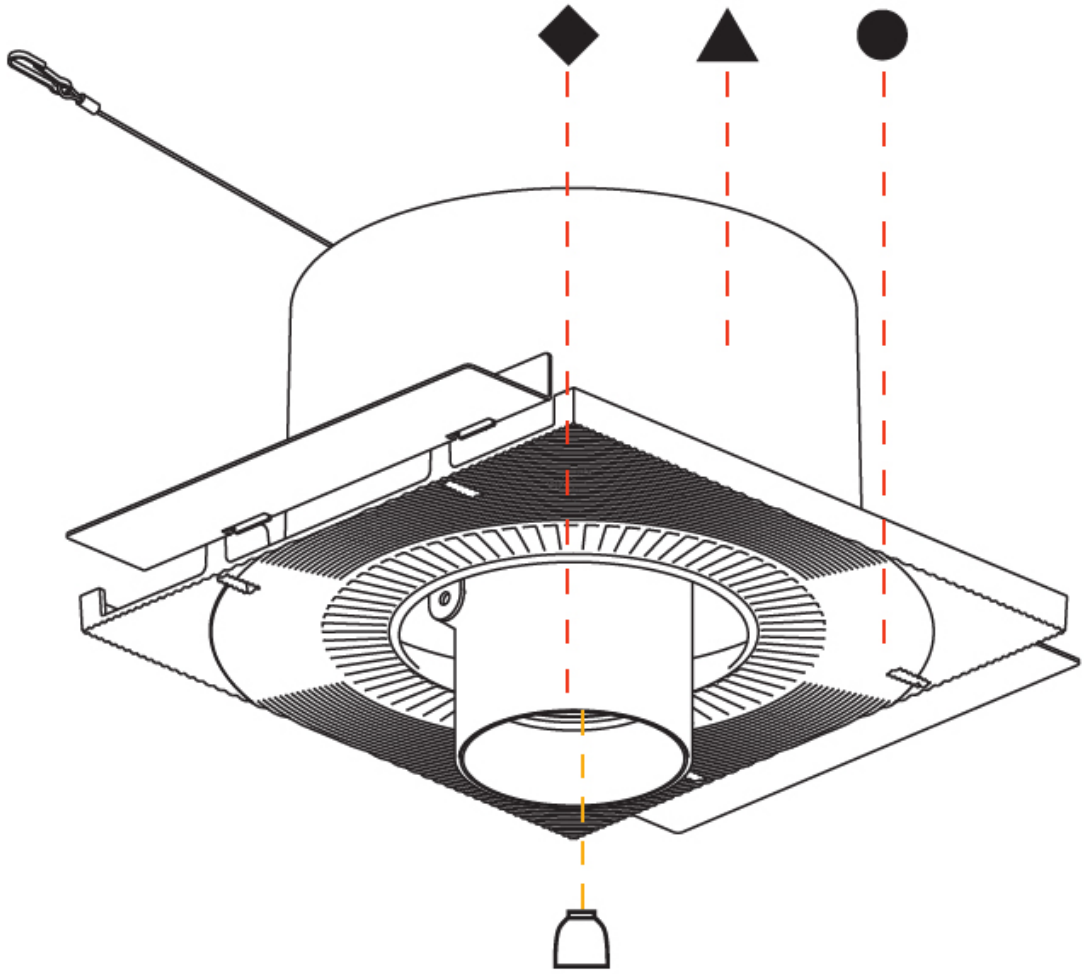

A

Zaneen Group Inc. © 2024, T 1800-388-3382, F 416-247-9319, www.zaneen.com

Available for International specifications by adding 'INT' at the end of the existing Model #. For assistance on 'custom' specifications, contact zteam@zaneen.com.
In a constant effort to supply the best product, we reserve the right to change specifications or materials without notice. The most recent specification sheets are found at zaneen.com

ZANEEN®

PROJECT	
TYPE	
SPECIFIER	
QUANTITY	
DATE	

IMAGINE ROUND AURA TRIMLESS

A35395- _____ - _____ - _____ - _____ - _____ - _____

base number	Color Temperature	Finishes (Diamond)	Finishes (Triangle)	Finishes (Circle)	Reflector Options	Lens Options

1.To build a product code in our configurator select the specify button on the base model # product page
2. To build a manual product code on this datasheet choose from the options listed below in blue font and add the suffix to the base model #

GENERAL

Series: Imagine
Subseries: Imagine Round Aura
Brand: Prolicht
Division: Architectural
Mounting Type: Trimless
Mounting Location: Ceiling
Subcategory: Spots

PHYSICAL

Shape: Round
Diameter (mm): 110
Diameter (in): 4 5/16
Length (mm): 220
Length (in): 8 11/16
Width (mm): 220
Width (in): 8 11/16
Height (mm): 174
Height (in): 6 7/8
Ceiling Thickness (mm): 10 / 12.5 / 15 / 25 / 30
Ceiling Thickness (in): 3/8 or 1/2 or 9/16 or 1 or 1 3/16
Min. Recessing Depth (mm): 145
Min. Recessing Depth (in): 5 11/16
Light Distribution: Adjustable / Direct
Weight (kg): 1.96
Weight (lbs): 4.31
Fixture Finish: SSR / BKV / CWI / CRY / HAB / LAG / UFT / ITA / RUA / RUR / MIC / FTG / MYG / TWT / LOD / PUS / FRO / FUP / KIA / POP / BLS / SPG / MEY / GOH / GUM / CHC / COM / ABZ / JAG / OBR / MOS / ROR
Fixture Material: Aluminum Die Cast
Cut-out Measurements: 225mm / 8 7/8" x 225mm / 8 7/8"
Upon Request: Unique Sizes

ELECTRICAL

Lamp Type: LED (Zhaga Standard)
Input Wattage (W): 19.3 + 2.6
Total Output Wattage (W): 16.5 + 2.2
Dimming: Tri-Mode (Non-Dimming and Phase Dimming (120Vac only) and 0-10V Dimming)
Driver Included: No
Driver Location: Remote
Driver Type: Constant Current & Constant Voltage - Universal
Driver Class: Class 2
Input Voltage (V): 120 - 277
Output Voltage (V): 24
Constant Current (MA): 500

LED

Number of LEDs: 2
Color Temperature (°K): 2700 / 3000 / 3500 / 4000
Max. Delivered Lumen (lm): 1515 / 1575 / 1673 / 1707
Nominal Lumen (lm): 2285 / 2375 / 2524 / 2575
CRI: >90 CRI
Lamp Life (hrs): 50000
Upon Request: Special Color Temperature

OPTICAL

Reflector°: 12 / 16 / 32
Optic°: Lens Pack - No Lens / Linear Spread Lens / Honeycomb / Spread Lens
Adjustability: Rotational 355°; Tilt 45°
Upon Request: Special Beam Angles

RATINGS AND CERTIFICATIONS

Certified By: Certified for North American Standards
IP rating: IP20

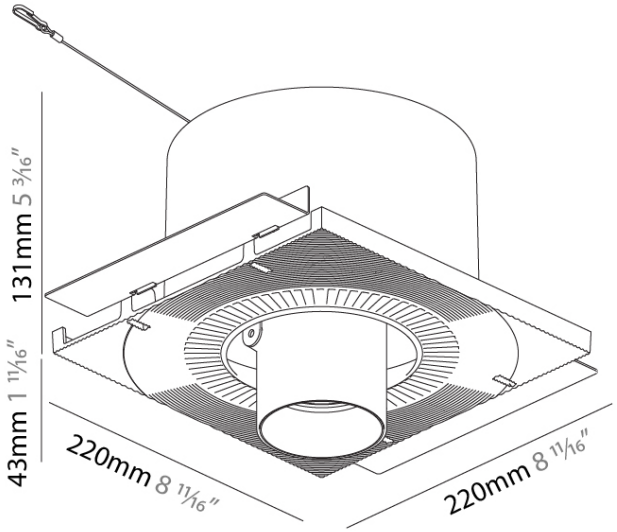

A

Zaneen Group Inc. © 2024, T 1800 388-3382, F 416-247-9319, www.zaneen.com
Available for International specifications by adding 'INT' at the end of the existing Model #. For assistance on 'custom' specifications, contact zteam@zaneen.com.
In a constant effort to supply the best product, we reserve the right to change specifications or materials without notice. The most recent specification sheets are found at zaneen.com

ZANEEN®

PROJECT	
TYPE	
SPECIFIER	
QUANTITY	
DATE	

IMAGINE ROUND AURA TRIMLESS

A35395-

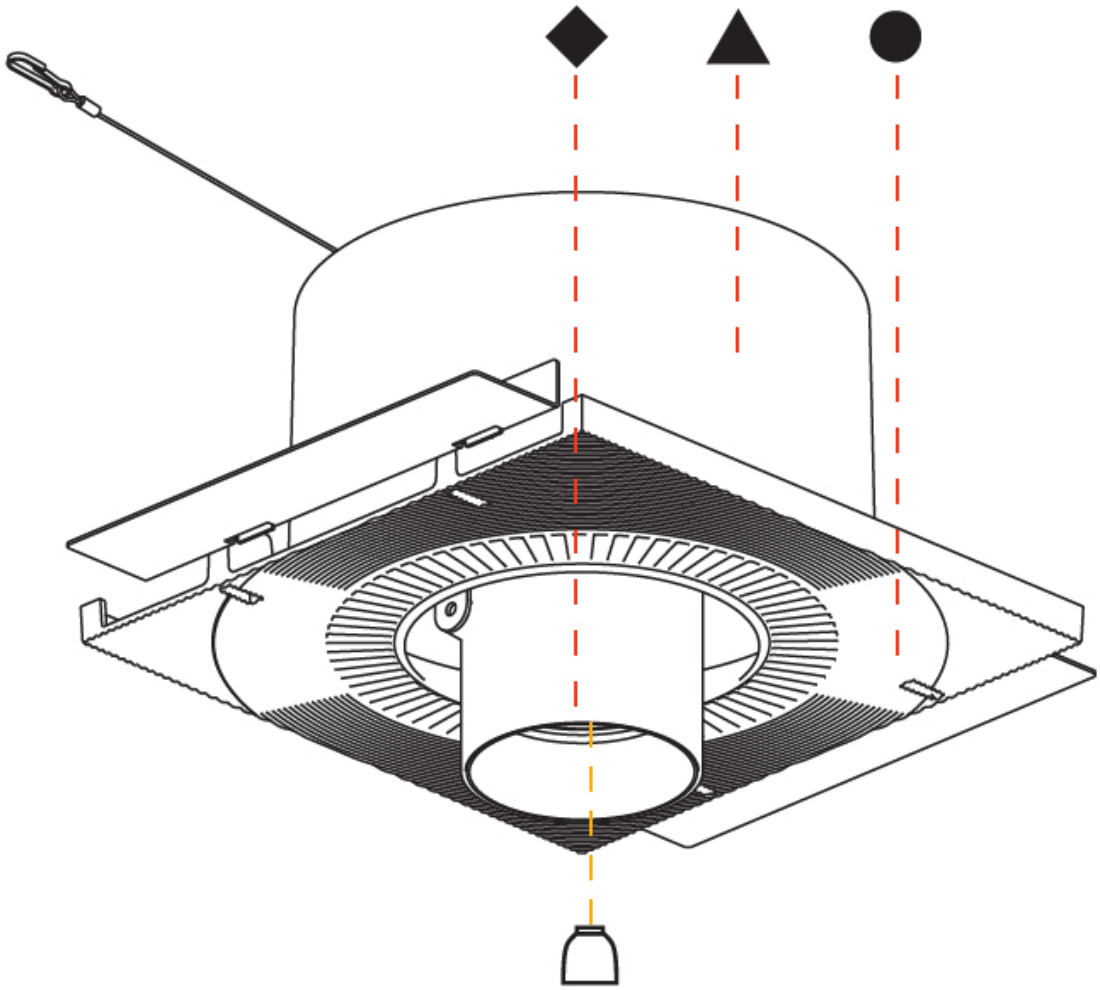

A

Zaneen Group Inc. © 2024, T 1800-388-3382, F 416-247-9319, www.zaneen.com

Available for International specifications by adding 'INT' at the end of the existing Model #. For assistance on 'custom' specifications, contact zteam@zaneen.com.
In a constant effort to supply the best product, we reserve the right to change specifications or materials without notice. The most recent specification sheets are found at zaneen.com

ZANEEN®

PROJECT	
TYPE	
SPECIFIER	
QUANTITY	
DATE	

IMAGINE SQUARE TRIMLESS

A35401- _____ - _____ - _____ - _____ - _____ - _____

base number	LED Dimming	Color Temperature	Finishes (Diamond)	Finishes (Triangle)	Finishes (Circle)	Reflector Options

1.To build a product code in our configurator select the specify button on the base model # product page
2. To build a manual product code on this datasheet choose from the options listed below in blue font and add the suffix to the base model #

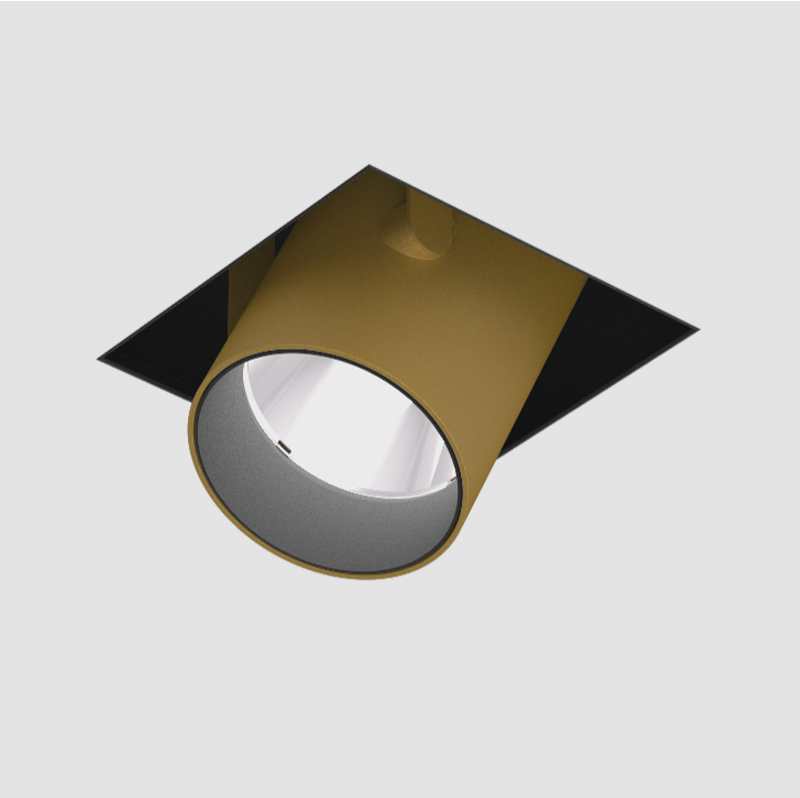

GENERAL

Series: Imagine
Subseries: Imagine Square
Brand: Prolicht
Division: Architectural
Mounting Type: Trimless
Mounting Location: Ceiling
Subcategory: Spots

PHYSICAL

Shape: Square
Length (mm): 220
Length (in): 8 11/16
Width (mm): 220
Width (in): 8 11/16
Height (mm): 174
Height (in): 6 7/8
Ceiling Thickness (mm): 10 / 12.5 / 15 / 25 / 30
Ceiling Thickness (in): 3/8 or 1/2 or 9/16 or 1 or 1 3/16
Min. Recessing Depth (mm): 145
Min. Recessing Depth (in): 5 11/16
Light Distribution: Adjustable / Direct
Weight (kg): 2.21
Weight (lbs): 4.86
Fixture Finish: SSR / BKV / CWI / CRY / HAB / LAG / UFT / ITA / RUA / RUR / MIC / FTG / MYG / TWT / LOD / PUS / FRO / FUP / KIA / POP / BLS / SPG / MEY / GOH / GUM / CHC / COM / ABZ / JAG / OBR / MOS / ROR
Fixture Material: Aluminum Die Cast
Cut-out Measurements: 225mm / 8 7/8" x 225mm / 8 7/8"
Upon Request: Unique Sizes

ELECTRICAL

Lamp Type: LED (Zhaga Standard)
Input Wattage (W): 23.1
Total Output Wattage (W): 18.7
Dimming: Tri-Mode (Non-Dimming and Phase Dimming (120Vac only) and 0-10V Dimming)
Driver Included: No
Driver Location: Recessed Housing
Driver Type: Constant Current - Universal
Driver Class: Class 2
Housing: See components
Input Voltage (V): 120 - 277
Constant Current (MA): 500

LED

Number of LEDs: 1
Color Temperature (°K): 2700 / 3000 / 3500 / 4000
Max. Delivered Lumen (lm): 1490 / 1530 / 1607 / 1640
CRI: >90 CRI
Lamp Life (hrs): 50000
Upon Request: Special Color Temperature

OPTICAL

Reflector°: 20 / 40 / 60
Adjustability: Rotational 355°; Tilt 45°
Upon Request: Special Beam Angles

RATINGS AND CERTIFICATIONS

Certified By: Certified for North American Standards
IP rating: IP20

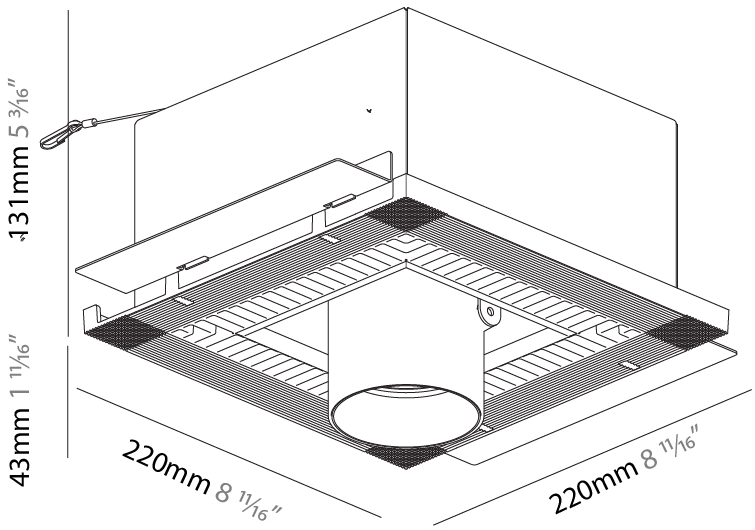

Zaneen Group Inc. © 2024, T 1800-388-3387, F 416-247-9313, www.zaneen.com
Available for International specifications by adding 'INT' at the end of the existing Model #. For assistance on 'custom' specifications, contact zteam@zaneen.com.
In a constant effort to supply the best product, we reserve the right to change specifications or materials without notice. The most recent specification sheets are found at zaneen.com

ZANEEN®

IMAGINE SQUARE TRIMLESS

PROJECT	
TYPE	
SPECIFIER	
QUANTITY	
DATE	

A35401-

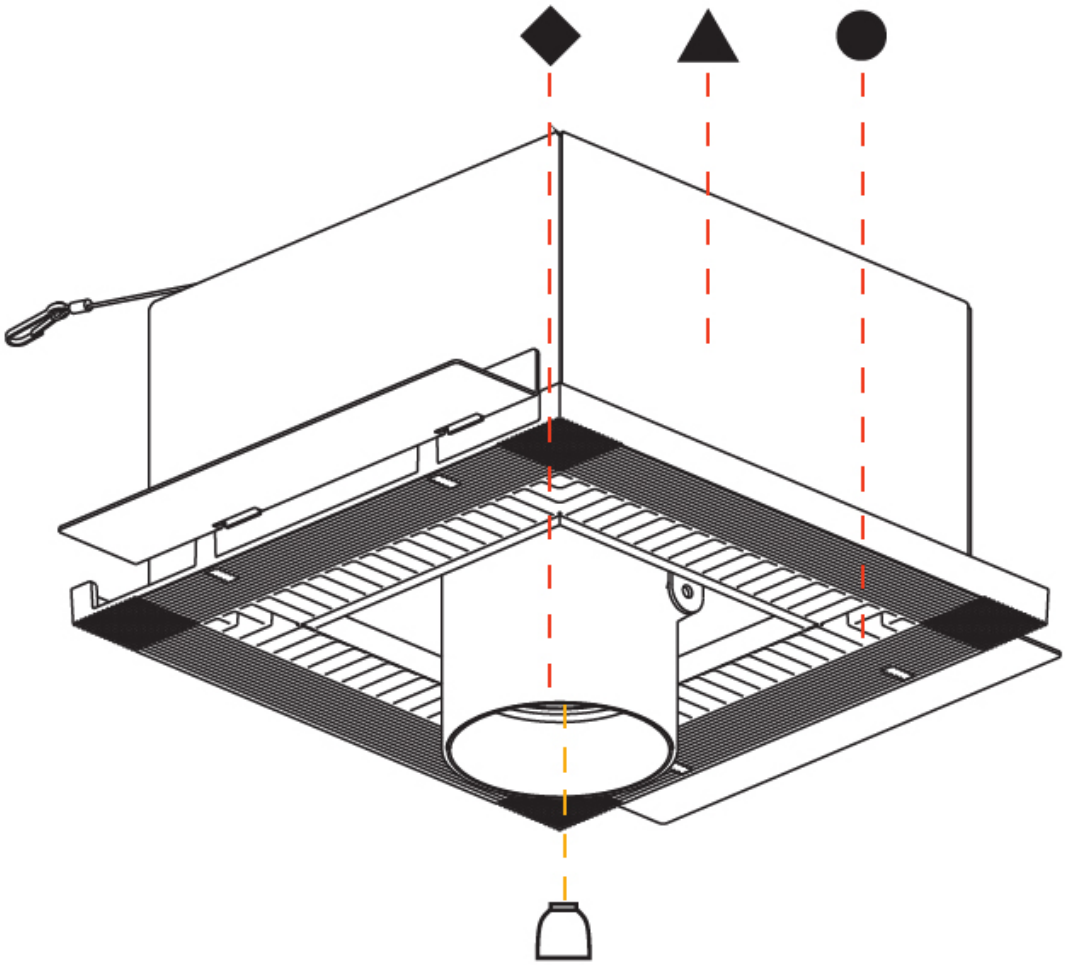

A

Zaneen Group Inc. © 2024, T 1800-388-3382, F 416-247-9319, www.zaneen.com

Available for International specifications by adding 'INT' at the end of the existing Model #. For assistance on 'custom' specifications, contact zteam@zaneen.com.
In a constant effort to supply the best product, we reserve the right to change specifications or materials without notice. The most recent specification sheets are found at zaneen.com

ZANEEN®

PROJECT	
TYPE	
SPECIFIER	
QUANTITY	
DATE	

IMAGINE SQUARE AURA TRIMLESS

A35407- _____ - _____ - _____ - _____ - _____ - _____

base number	LED Dimming	Color Temperature	Finishes (Diamond)	Finishes (Triangle)	Finishes (Circle)	Reflector Options

1.To build a product code in our configurator select the specify button on the base model # product page
2. To build a manual product code on this datasheet choose from the options listed below in blue font and add the suffix to the base model #

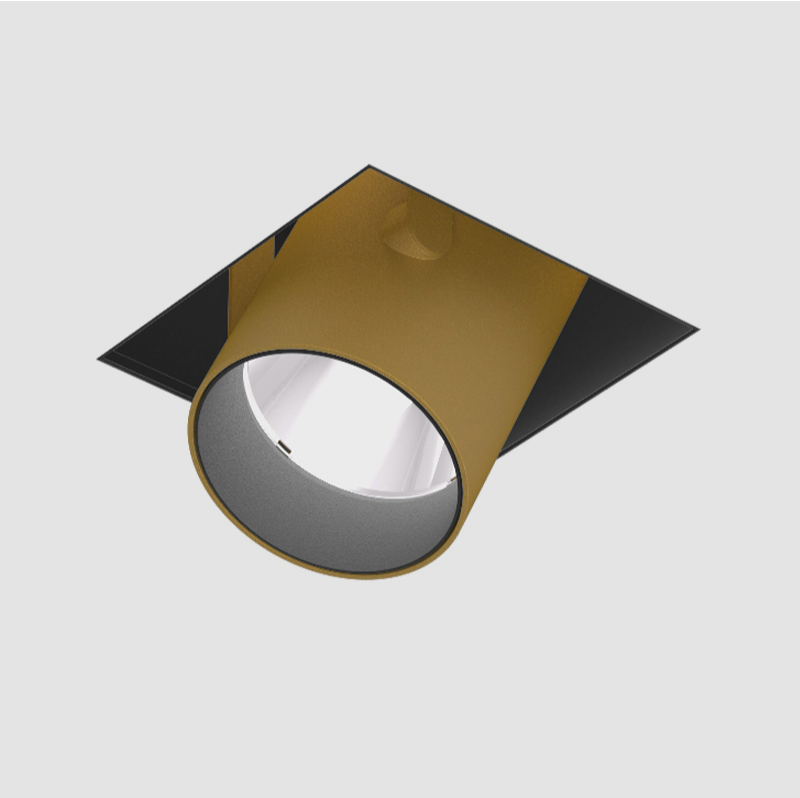

GENERAL

Series: Imagine
Subseries: Imagine Square Aura
Brand: Prolicht
Division: Architectural
Mounting Type: Trimless
Mounting Location: Ceiling
Subcategory: Spots

PHYSICAL

Shape: Square
Length (mm): 220
Length (in): 8 $^{11}/_{16}$
Width (mm): 220
Width (in): 8 $^{11}/_{16}$
Height (mm): 174
Height (in): 6 $^{7}/_{8}$
Ceiling Thickness (mm): 10 / 12.5 / 15 / 25 / 30
Ceiling Thickness (in): 3/8 or 1/2 or 9/16 or 1 or 1 3/16
Min. Recessing Depth (mm): 145
Min. Recessing Depth (in): 5 $^{11}/_{16}$
Light Distribution: Adjustable / Direct
Weight (kg): 2.888
Weight (lbs): 6.35
Fixture Finish: SSR / BKV / CWI / CRY / HAB / LAG / UFT / ITA / RUA / RUR / MIC / FTG / MYG / TWT / LOD / PUS / FRO / FUP / KIA / POP / BLS / SPG / MEY / GOH / GUM / CHC / COM / ABZ / JAG / OBR / MOS / ROR
Fixture Material: Aluminum Die Cast
Cut-out Measurements: 225mm / 8 7/8" x 225mm / 8 7/8"
Upon Request: Unique Sizes

ELECTRICAL

Lamp Type: LED (Zhaga Standard)
Input Wattage (W): 19.3 + 2.6
Total Output Wattage (W): 16.5 + 2.2
Dimming: Tri-Mode (Non-Dimming and Phase Dimming (120Vac only) and 0-10V Dimming)
Driver Included: No
Driver Location: Remote
Driver Type: Constant Current & Constant Voltage - Universal
Driver Class: Class 2
Input Voltage (V): 120 - 277
Output Voltage (V): 24
Constant Current (MA): 500

LED

Number of LEDs: 2
Color Temperature (°K): 2700 / 3000 / 4000
Max. Delivered Lumen (lm): 1540 / 1580 / 1690
CRI: >90 CRI
Lamp Life (hrs): 50000
Upon Request: Special Color Temperature

OPTICAL

Reflector°: 20 / 40 / 60
Adjustability: Rotational 355°; Tilt 45°
Upon Request: Special Beam Angles

RATINGS AND CERTIFICATIONS

Certified By: Certified for North American Standards
IP rating: IP20

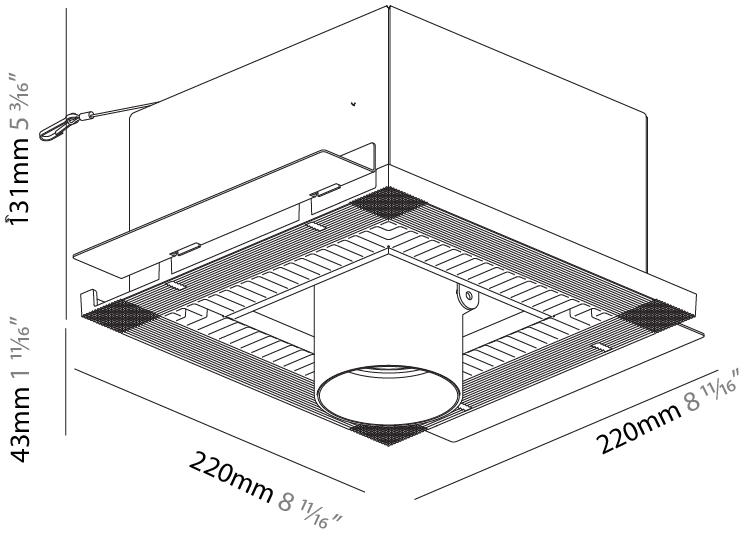

Zaneen Group Inc. © 2024, T 1800-388-3387, F 416-247-9319, www.zaneen.com
Available for International specifications by adding 'INT' at the end of the existing Model #. For assistance on 'custom' specifications, contact zteam@zaneen.com.
In a constant effort to supply the best product, we reserve the right to change specifications or materials without notice. The most recent specification sheets are found at zaneen.com

ZANEEN®

PROJECT	
TYPE	
SPECIFIER	
QUANTITY	
DATE	

IMAGINE FLEX SURFACE

A3D105- _____ - _____ - _____ - _____ -

base number	LED Dimming	Color Temperature	Finishes (Diamond)	Finishes (Triangle)

1.To build a product code in our configurator select the specify button on the base model # product page
2. To build a manual product code on this datasheet choose from the options listed below in blue font and add the suffix to the base model #

GENERAL

Series: Imagine
Subseries: Imagine Flex
Brand: Prolicht
Division: Architectural
Mounting Type: Surface
Mounting Location: Ceiling
Subcategory: Spots

PHYSICAL

Shape: Cylinder
Diameter (mm): 75
Diameter (in): 2 15/16
Height (mm): 190
Height (in): 7 1/2
Max. Overall Height (mm): 235
Max. Overall Height (in): 9 1/4
Light Distribution: Adjustable / Direct
Weight (kg): 0.919
Weight (lbs): 2.02
Fixture Finish: SSR / BKV / CWI / CRY / HAB / LAG / UFT / ITA / RUA / RUR / MIC / FTG / MYG / TWT / LOD / PUS / FRO / FUP / KIA / POP / BLS / SPG / MEY / GOH / GUM / CHC / COM / ABZ / JAG / OBR / MOS / ROR
Fixture Material: Aluminum Die Cast

ELECTRICAL

Lamp Type: LED (Zhaga Standard)
Input Wattage (W): 20
Total Output Wattage (W): 18.2
Dimming: Tri-Mode (Non-Dimming and Phase Dimming (120Vac only) and 0-10V Dimming)
Driver Included: Yes
Driver Location: Integrated
Driver Type: Constant Current - Universal
Driver Class: Class 2
Input Voltage (V): 120 - 277
Constant Current (MA): 500

LED

Number of LEDs: 1
Color Temperature (°K): 2700 / 3000 / 3500 / 4000
Max. Delivered Lumen (lm): 788 / 817 / 859 / 876
Nominal Lumen (lm): 1782 / 1848 / 1941 / 1981
CRI: >90 CRI
Lamp Life (hrs): 50000

OPTICAL

Reflector°: 14° to 48°
Adjustability: Rotational 350°; Tilt 90°

RATINGS AND CERTIFICATIONS

Certified By: Certified for North American Standards
IP rating: IP20

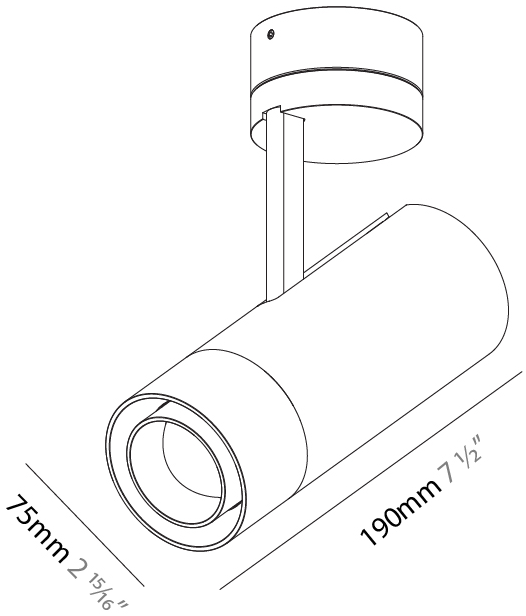

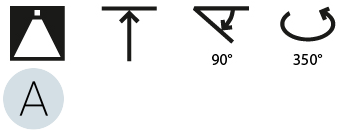

Zaneen Group Inc. © 2024, T 1800-388-3382, F 416-247-9319, www.zaneen.com
Available for International specifications by adding 'INT' at the end of the existing Model #. For assistance on 'custom' specifications, contact zteam@zaneen.com.
In a constant effort to supply the best product, we reserve the right to change specifications or materials without notice. The most recent specification sheets are found at zaneen.com

ZANEEN®

IMAGINE FLEX SURFACE

PROJECT	
TYPE	
SPECIFIER	
QUANTITY	
DATE	

A3D105-

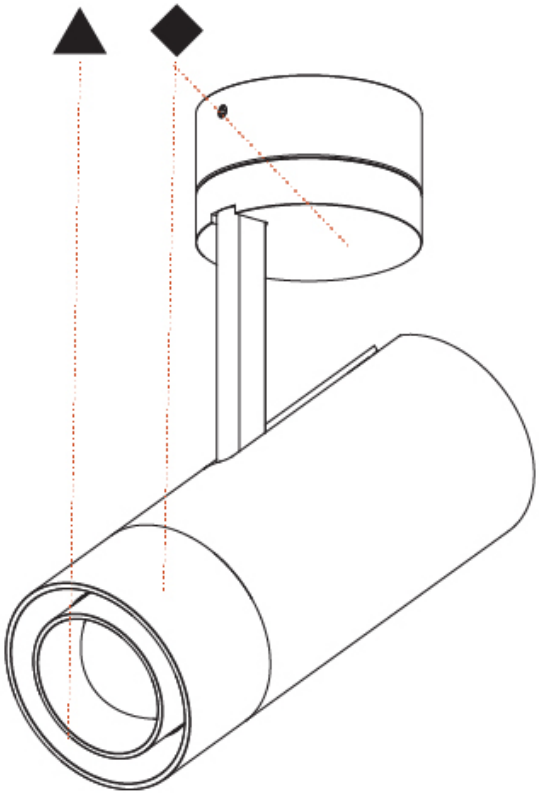

A

Zaneen Group Inc. © 2024, T 1800-388-3382, F 416-247-9319, www.zaneen.com

Available for International specifications by adding 'INT' at the end of the existing Model #. For assistance on 'custom' specifications, contact zteam@zaneen.com.
In a constant effort to supply the best product, we reserve the right to change specifications or materials without notice. The most recent specification sheets are found at zaneen.com

ZANEEN®

PROJECT	
TYPE	
SPECIFIER	
QUANTITY	
DATE	

IMAGINE 60 SURFACE

A3D111- _____ - _____ - _____ - _____ - _____

base number	LED Dimming	Color Temperature	Finishes (Diamond)	Reflector Options	Lens Options

1.To build a product code in our configurator select the specify button on the base model # product page
2. To build a manual product code on this datasheet choose from the options listed below in blue font and add the suffix to the base model #

GENERAL

Series: Imagine
Subseries: Imagine 60
Brand: Prolicht
Division: Architectural
Mounting Type: Surface
Mounting Location: Ceiling
Subcategory: Spots

PHYSICAL

Shape: Cylinder
Diameter (mm): 60
Diameter (in): 2 3/8
Height (mm): 170
Height (in): 6 11/16
Max. Overall Height (mm): 215
Max. Overall Height (in): 8 7/16
Light Distribution: Adjustable / Direct
Weight (kg): 0.604
Weight (lbs): 1.33
Fixture Finish: SSR / BKV / CWI / CRY / HAB / LAG / UFT / ITA / RUA / RUR / MIC / FTG / MYG / TWT / LOD / PUS / FRO / FUP / KIA / POP / BLS / SPG / MEY / GOH / GUM / CHC / COM / ABZ / JAG / OBR / MOS / ROR
Fixture Material: Aluminum Die Cast

ELECTRICAL

Lamp Type: LED (Zhaga Standard)
Input Wattage (W): 13
Total Output Wattage (W): 11.8
Dimming: Tri-Mode (Non-Dimming and Phase Dimming (120Vac only) and 0-10V Dimming)
Driver Included: Yes
Driver Location: Integrated
Driver Type: Constant Current - Universal
Driver Class: Class 2
Input Voltage (V): 120 - 277
Constant Current (MA): 500

LED

Number of LEDs: 1
Color Temperature (°K): 2700 / 3000 / 3500 / 4000
Max. Delivered Lumen (lm): 987 / 1023 / 1076 / 1098
Nominal Lumen (lm): 1304 / 1352 / 1421 / 1450
CRI: >90 CRI
Lamp Life (hrs): 50000

OPTICAL

Reflector°: 18/ / 34 / 46
Optic°: Lens Pack - No Lens / Linear Spread Lens / Honeycomb / Spread Lens
Adjustability: Rotational 350°; Tilt 90°

RATINGS AND CERTIFICATIONS

Certified By: Certified for North American Standards
IP rating: IP20

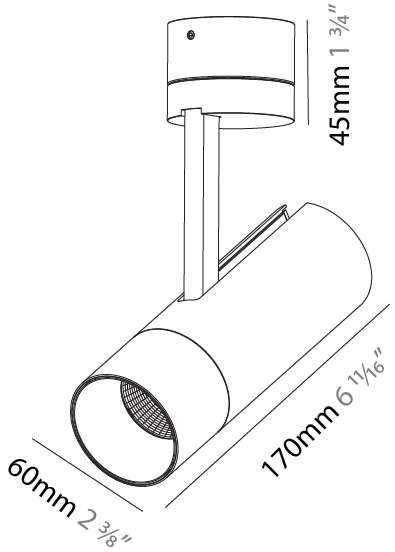

A

Zaneen Group Inc. © 2024, T 1800-388-3382, F 416-247-9319, www.zaneen.com
Available for International specifications by adding 'INT' at the end of the existing Model #. For assistance on 'custom' specifications, contact zteam@zaneen.com.
In a constant effort to supply the best product, we reserve the right to change specifications or materials without notice. The most recent specification sheets are found at zaneen.com

ZANEEN®

PROJECT	
TYPE	
SPECIFIER	
QUANTITY	
DATE	

IMAGINE 60 SURFACE

A3D111-

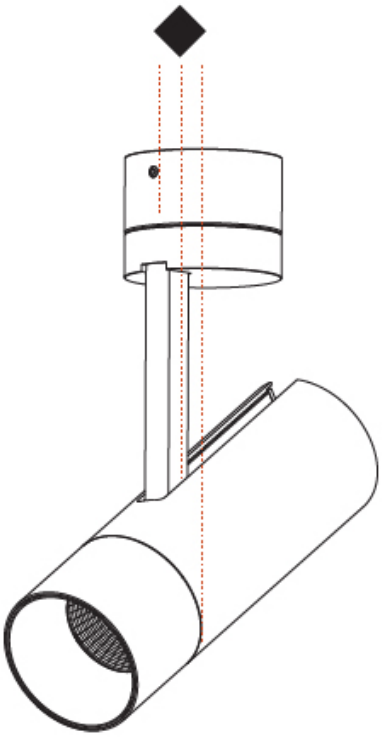

A

Zaneen Group Inc. © 2024, T 1800-388-3382, F 416-247-9319, www.zaneen.com

Available for International specifications by adding 'INT' at the end of the existing Model #. For assistance on 'custom' specifications, contact zteam@zaneen.com.
In a constant effort to supply the best product, we reserve the right to change specifications or materials without notice. The most recent specification sheets are found at zaneen.com

ZANEEN®

PROJECT	
TYPE	
SPECIFIER	
QUANTITY	
DATE	

IMAGINE 75 SURFACE

A3D113- _____ - _____ - _____ - _____

base number | LED Dimming | Color Temperature | Finishes (Diamond) | Reflector Options

1.To build a product code in our configurator select the specify button on the base model # product page
2. To build a manual product code on this datasheet choose from the options listed below in blue font and add the suffix to the base model #

GENERAL

Series: Imagine
Subseries: Imagine 75
Brand: Prolicht
Division: Architectural
Mounting Type: Surface
Mounting Location: Ceiling
Subcategory: Spots

PHYSICAL

Shape: Cylinder
Diameter (mm): 75
Diameter (in): 2 15/16
Height (mm): 190
Height (in): 7 1/2
Max. Overall Height (mm): 235
Max. Overall Height (in): 9 1/4
Light Distribution: Adjustable / Direct
Weight (kg): 0.919
Weight (lbs): 2.02
Fixture Finish: SSR / BKV / CWI / CRY / HAB / LAG / UFT / ITA / RUA / RUR / MIC / FTG / MYG / TWT / LOD / PUS / FRO / FUP / KIA / POP / BLS / SPG / MEY / GOH / GUM / CHC / COM / ABZ / JAG / OBR / MOS / ROR
Fixture Material: Aluminum Die Cast

ELECTRICAL

Lamp Type: LED (Zhaga Standard)
Input Wattage (W): 20.9
Total Output Wattage (W): 19
Dimming: Tri-Mode (Non-Dimming and Phase Dimming (120Vac only) and 0-10V Dimming)
Driver Included: Yes
Driver Location: Integrated
Driver Type: Constant Current - Universal
Driver Class: Class 2
Input Voltage (V): 120 - 277
Constant Current (MA): 500

LED

Number of LEDs: 1
Color Temperature (°K): 2700 / 3000 / 3500 / 4000
Max. Delivered Lumen (lm): 1490 / 1530 / 1607 / 1640
CRI: >90 CRI
Lamp Life (hrs): 50000

OPTICAL

Reflector°: 20 / 25 / 40
Adjustability: Rotational 350°; Tilt 90°

RATINGS AND CERTIFICATIONS

Certified By: Certified for North American Standards
IP rating: IP20

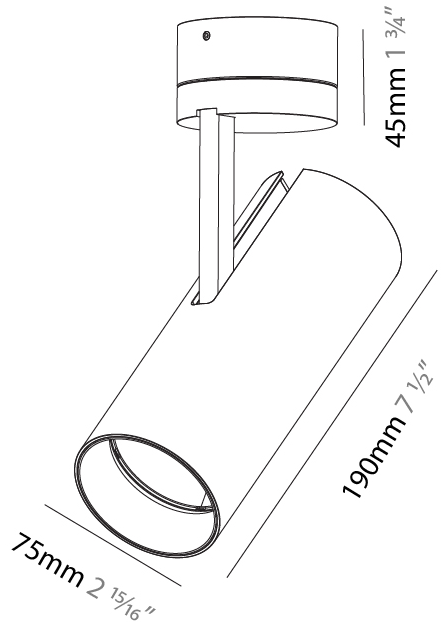

A

Zaneen Group Inc. © 2024, T 1800-388-3382, F 416-247-9319, www.zaneen.com
Available for International specifications by adding 'INT' at the end of the existing Model #. For assistance on 'custom' specifications, contact zteam@zaneen.com.
In a constant effort to supply the best product, we reserve the right to change specifications or materials without notice. The most recent specification sheets are found at zaneen.com

ZANEEN®

PROJECT	
TYPE	
SPECIFIER	
QUANTITY	
DATE	

IMAGINE 75 SURFACE

A3D113-

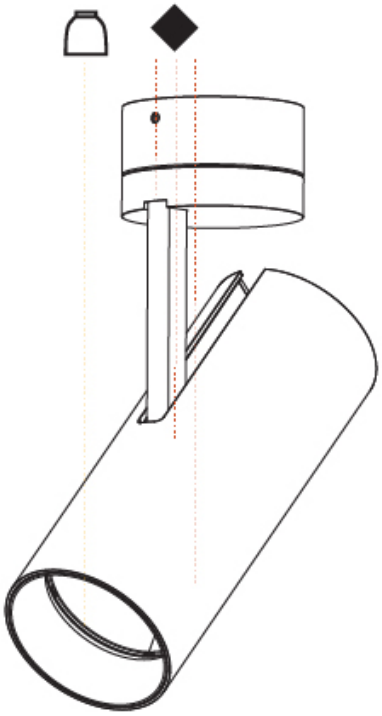

A

Zaneen Group Inc. © 2024, T 1800-388-3382, F 416-247-9319, www.zaneen.com

Available for International specifications by adding 'INT' at the end of the existing Model #. For assistance on 'custom' specifications, contact zteam@zaneen.com.
In a constant effort to supply the best product, we reserve the right to change specifications or materials without notice. The most recent specification sheets are found at zaneen.com

ZANEEN®

PROJECT	
TYPE	
SPECIFIER	
QUANTITY	
DATE	

IMAGINE 75 TRACK

A3T039- _____ - _____ - _____ - _____ - _____

base number	LED Dimming	Color Temperature	Finishes (Diamond)	Track Adapter Finish	Reflector Options

1.To build a product code in our configurator select the specify button on the base model # product page
2. To build a manual product code on this datasheet choose from the options listed below in blue font and add the suffix to the base model #

GENERAL

Series: Imagine
Subseries: Imagine 75
Brand: Prolicht
Division: Architectural
Mounting Type: Track
Mounting Location: Ceiling
Subcategory: Spots

PHYSICAL

Shape: Cylinder
Diameter (mm): 75
Diameter (in): 2 15/16
Height (mm): 190
Height (in): 7 1/2
Max. Overall Height (mm): 210
Max. Overall Height (in): 8 1/4
Light Distribution: Adjustable / Direct
Weight (kg): 0.768
Weight (lbs): 1.69
Fixture Finish: SSR / BKV / CWI / CRY / HAB / LAG / UFT / ITA / RUA / RUR / MIC / FTG / MYG / TWT / LOD / PUS / FRO / FUP / KIA / POP / BLS / SPG / MEY / GOH / GUM / CHC / COM / ABZ / JAG / OBR / MOS / ROR
Fixture Material: Aluminum Die Cast

ELECTRICAL

Lamp Type: LED (Zhaga Standard)
Input Wattage (W): 19
Total Output Wattage (W): 17.3
Dimming: Tri-Mode (Non-Dimming and Phase Dimming (120Vac only) and 0-10V Dimming)
Driver Included: Yes
Driver Location: Integrated
Driver Type: Constant Current - Universal
Driver Class: Class 2
Input Voltage (V): 120 - 277
Constant Current (MA): 500

LED

Number of LEDs: 1
Color Temperature (°K): 2700 / 3000 / 3500 / 4000
Max. Delivered Lumen (lm): 1432 / 1492 / 1555 / 1624
CRI: >90 CRI
Lamp Life (hrs): 50000

OPTICAL

Reflector°: 16 / 32
Adjustability: Rotational 350°; Tilt 90°

RATINGS AND CERTIFICATIONS

Certified By: Certified for North American Standards
IP rating: IP20

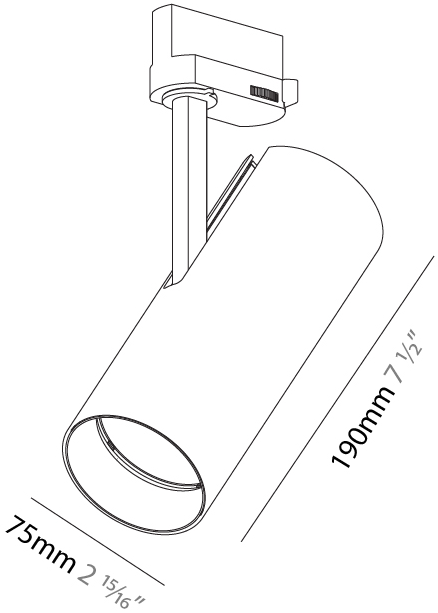

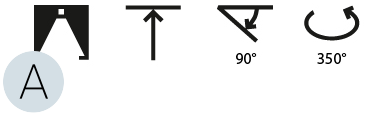

Zaneen Group Inc. © 2024, T 1800-388-3382, F 416-247-9319, www.zaneen.com
Available for International specifications by adding 'INT' at the end of the existing Model #. For assistance on 'custom' specifications, contact zteam@zaneen.com.
In a constant effort to supply the best product, we reserve the right to change specifications or materials without notice. The most recent specification sheets are found at zaneen.com

ZANEEN®

PROJECT	
TYPE	
SPECIFIER	
QUANTITY	
DATE	

IMAGINE 75 TRACK

A3T039-

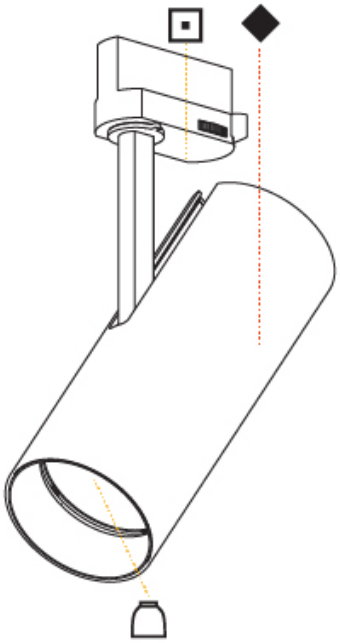

A

Zaneen Group Inc. © 2024, T 1800-388-3382, F 416-247-9319, www.zaneen.com

Available for International specifications by adding 'INT' at the end of the existing Model #. For assistance on 'custom' specifications, contact zteam@zaneen.com.
In a constant effort to supply the best product, we reserve the right to change specifications or materials without notice. The most recent specification sheets are found at zaneen.com

ZANEEN®

PROJECT	
TYPE	
SPECIFIER	
QUANTITY	
DATE	

IMAGINE FLEX TRACK

A3T110- _____ - _____ - _____ - _____ - _____

base number	LED Dimming	Color Temperature	Finishes (Diamond)	Finishes (Triangle)	Track Adapter Finish

1.To build a product code in our configurator select the specify button on the base model # product page
2. To build a manual product code on this datasheet choose from the options listed below in blue font and add the suffix to the base model #

GENERAL

Series: Imagine
Subseries: Imagine Flex
Brand: Prolicht
Division: Architectural
Mounting Type: Track
Mounting Location: Ceiling
Subcategory: Spots

PHYSICAL

Shape: Cylinder
Diameter (mm): 75
Diameter (in): 2 15/16
Height (mm): 190
Height (in): 7 1/2
Max. Overall Height (mm): 210
Max. Overall Height (in): 8 1/4
Light Distribution: Adjustable / Direct
Weight (kg): 0.702
Weight (lbs): 1.54
Fixture Finish: SSR / BKV / CWI / CRY / HAB / LAG / UFT / ITA / RUA / RUR / MIC / FTG / MYG / TWT / LOD / PUS / FRO / FUP / KIA / POP / BLS / SPG / MEY / GOH / GUM / CHC / COM / ABZ / JAG / OBR / MOS / ROR
Holder Finish: BLK / WHI / SIL
Fixture Material: Aluminum Die Cast

ELECTRICAL

Lamp Type: LED (Zhaga Standard)
Input Wattage (W): 20
Total Output Wattage (W): 18.2
Dimming: Tri-Mode (Non-Dimming and Phase Dimming (120Vac only) and 0-10V Dimming)
Driver Included: Yes
Driver Location: Integrated
Driver Type: Constant Current - Universal
Driver Class: Class 2
Input Voltage (V): 120 - 277
Constant Current (MA): 500

LED

Number of LEDs: 1
Color Temperature (°K): 2700 / 3000 / 3500 / 4000
Max. Delivered Lumen (lm): 788 / 817 / 859 / 876
Nominal Lumen (lm): 1782 / 1848 / 1941 / 1981
CRI: >90 CRI
Lamp Life (hrs): 50000

OPTICAL

Reflector°: 14° to 48°
Adjustability: Rotational 350°; Tilt 90°

RATINGS AND CERTIFICATIONS

Certified By: Certified for North American Standards
IP rating: IP20

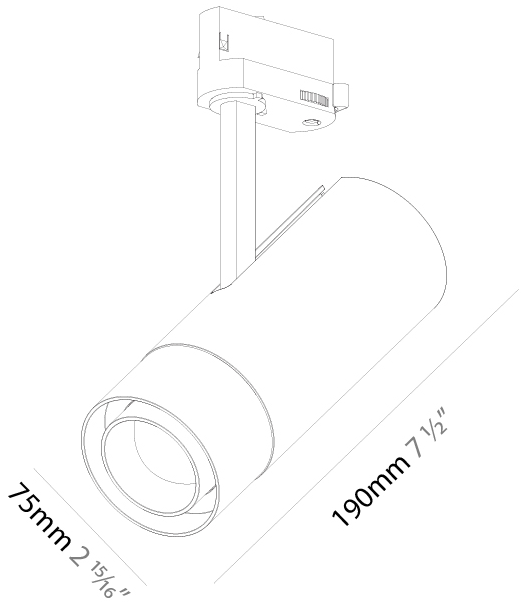

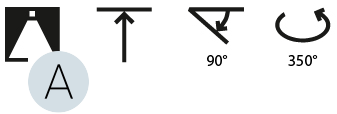

Zaneen Group Inc. © 2024, T 1800-388-3382, F 416-247-9319, www.zaneen.com
Available for International specifications by adding 'INT' at the end of the existing Model #. For assistance on 'custom' specifications, contact zteam@zaneen.com.
In a constant effort to supply the best product, we reserve the right to change specifications or materials without notice. The most recent specification sheets are found at zaneen.com

ZANEEN®

IMAGINE FLEX TRACK

PROJECT	
TYPE	
SPECIFIER	
QUANTITY	
DATE	

A3T110-

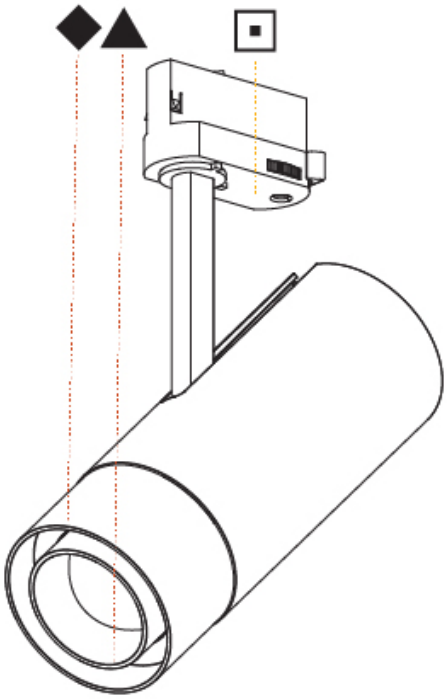

A

Zaneen Group Inc. © 2024, T 1800-388-3382, F 416-247-9319, www.zaneen.com

Available for International specifications by adding 'INT' at the end of the existing Model #. For assistance on 'custom' specifications, contact zteam@zaneen.com.
In a constant effort to supply the best product, we reserve the right to change specifications or materials without notice. The most recent specification sheets are found at zaneen.com

ZANEEN®

IMAGINE

COLOR FINISH CHART

PROJECT	
TYPE	
SPECIFIER	
QUANTITY	
DATE	

Fixture Finish

Sparkling Silver - 01 (SSR)

Black Velvet - 02 (BKV)

Crystal White - 03 (CWI)

Creamy - 04 (CRY)

Hampton Bay - 05 (HAB)

Lagoon - 06 (LAG)

Urban Forest - 07 (UFT)

In the Army - 08 (ITA)

Rusty Angel - 09 (RUA)

Rusty Rush - 10 (RUR)

Milk and Chocolate - 11 (MIC)

Fade to Gray - 12 (FTG)

Mysterious Gray - 13 (MYG)

Twilight - 14 (TWT)

Lost Dream - 15 (LOD)

Purple Sky - 16 (PUS)

Fresh Oh - 17 (FRO)

Funky P. - 18 (FUP)

Kissing Aphrodite - 19 (KIA)

Poseidon's Paradise - 20 (POP)

Blue Sky - 21 (BLS)

Spring Green - 22 (SPG)

Mellow Yellow - 23 (MEY)

Golden Heart - 24 (GOH)

Gun Metal - 25 (GUM)

Champagne Cream - 26 (CHC)

Copper Mine - 27 (COM)

Ancient Bronze - 28 (ABZ)

Jazz Gold - 29 (JAG)

Olive Breeze - 30 (OBR)

Moonlight Silver - 31 (MOS)

Rosewood Red - 32 (ROR)

Holder Finish

Black - BLK (BLK)

White - WHI (WHI)

Digital: Not all screens are calibrated the same, and therefore, colors will appear differently between screens.
Physical: When texture is involved, there will be variations in color, character and tone within a product series and between product families.

Gun Metal: No Gun Metal finish is alike. It combines a mixture of transparent and black color particles which ensures a highly individual effect and no luminaire being identical.
Champagne Cream, Copper Mine, Ancient Bronze + Jazz Gold: These finishes have slight fading from specific powder coating production. Each luminaire will slightly vary.

A

Zaneen Group Inc. © 2024, T 1800-388-3382, F 416-247-9319, www.zaneen.com

Available for International specifications by adding 'INT' at the end of the existing Model #. For assistance on 'custom' specifications, contact zteam@zaneen.com.
In a constant effort to supply the best product, we reserve the right to change specifications or materials without notice. The most recent specification sheets are found at zaneen.com

ZANEEN®

IMAGINE

PROJECT	
TYPE	
SPECIFIER	
QUANTITY	
DATE	

LEGEND

	floor-mounted		pivotable		special LED (upon request) RGB, RGBW, tunable, gold+, meat+, art+, fashion+
	wall and ceiling: recessed and surface mounted		rotating		warm dim / natural dimming LED
	ceiling-mounted and wall-mounted		illuminate tilted		rechargeable battery powered
	wall-mounted		color of suspension cable		fixture with natural vivid LED (upon request)
	omni-directional light distribution		length of suspension cable	CRI	color rendering index
	direct light distribution		reflector degree selection	°K	color temperature
	direct/indirect light distribution		super spot	LM	lumen (luminous flux)
	indirect light distribution		lens	LM/W	efficacy (lumens per watt)
	asymmetric light distribution		lens pack	UGR	Unified Glare Rating (UGR) range from 5-40
	aura light distribution		shine ring	316	marine grade (AISI 316 stainless steel)
	round wall or ceiling cut-out		integrated shine ring with diffuser		walk on
	square wall or ceiling cut-out		free individual colors 01-29		drive on
	the supplied jig specifies the cutout dimensions		individual colors: 00 (free of charge), 01-25 (extra charge)	DSC	Dark Sky Compliance
	minimum distance (meters) lamp - object		luminaire part to be colored (F1)		Americans with Disabilities Act (less than 4" off the wall located between 27"-84" from floor)
	recessed depth		luminaire part to be colored (F2)		lamp protected against explosion
	ceiling thickness in mm		luminaire part to be colored (F3)		blown glass using traditional methods by master glass blower
	ceiling thickness selection		luminaire part to be colored (F4)		acoustic material
	dimmable DP (phase), DV (0-10V), DD (dali), DS (step-dim)		luminaire part to be colored (F5)		protection class I, protection insulation
	included or excluded LED driver/transformer/ control gear		color of 3-circuit adaptor		protection class II, protection insulation
	separately switchable		indirect diffuser		ETL Certified to UL and CSA Standards
	sensor	D	direct diffuser		UL Certified to UL and CSA Standards
	remote control		ball-proof (upon request)		CSA Certified to UL and CSA Standards
	available upon request		accessory		Certified for North American Standards

IP RATING

IP20	protected against ingress of solid bodies greater than 12.5mm (finger)
IP33	protected against ingress of solid bodies greater than 2.5mm protected against sprays of water up to 60 degrees from the vertical (rain)
IP40	protected against ingress of solid bodies greater than 1mm (wire) no protection against the ingress of moisture
IP43	protected against ingress of solid bodies greater than 1mm (wire) protected against sprays of water up to 60 degrees from the vertical (rain)
IP44	protected against ingress of solid bodies greater than 1mm (wire) protected against water splashed from all directions
IP54	protected against limited ingress of dust (wet rooms/covered outdoor areas) protected against water splashed from all directions
IP65	protected against ingress of dust protected against jets of water
IP66	protected against ingress of dust protected against powerful jets of water or heavy seas
IP67	protected against ingress of dust protected against immersion of water between 15cm - 1m for 30 minutes
IP68	protected against ingress of dust protected against immersion of water under pressure for long periods

IK RATING

IK01	protected against 0.14 joules impact (equivalent to 0.25kg mass dropped from 56mm above the surface)
IK02	protected against 0.2 joules impact (equivalent to 0.25kg mass dropped from 80mm above the surface)
IK03	protected against 0.35 joules impact (equivalent to 0.25kg mass dropped from 140mm above the surface)
IK04	protected against 0.5 joules impact (equivalent to 0.25kg mass dropped from 200mm above the surface)
IK05	protected against 0.7 joules impact (equivalent to 0.25kg mass dropped from 280mm above the surface)
IK06	protected against 1 joules impact (equivalent to 0.25kg mass dropped from 400mm above the surface)
IK07	protected against 2 joules impact (equivalent to 0.5kg mass dropped from 400mm above the surface)
IK08	protected against 5 joules impact (equivalent to 1.7kg mass dropped from 300mm above the surface)
IK09	protected against 10 joules impact (equivalent to 5.0kg mass dropped from 200mm above the surface)
IK10	protected against 20 joules impact (equivalent to 5.0kg mass dropped from 400mm above the surface)